RELEASE NUMBER	REV LTR	ZONE	REVISION DESCRIPTION	BY	DATE	APPD

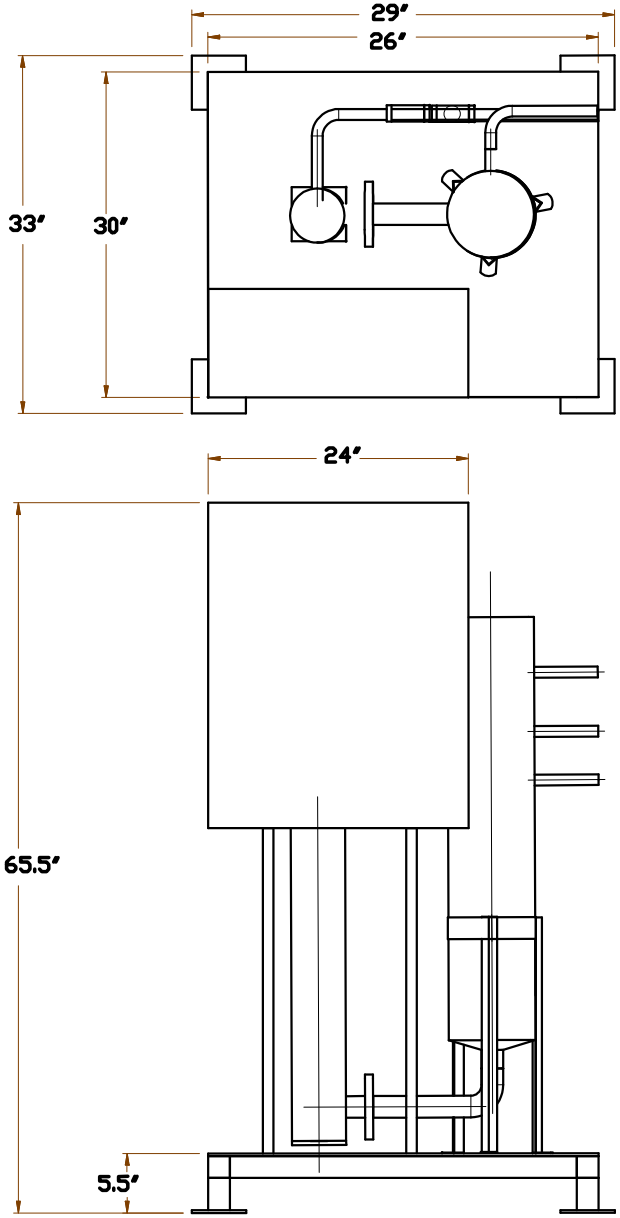

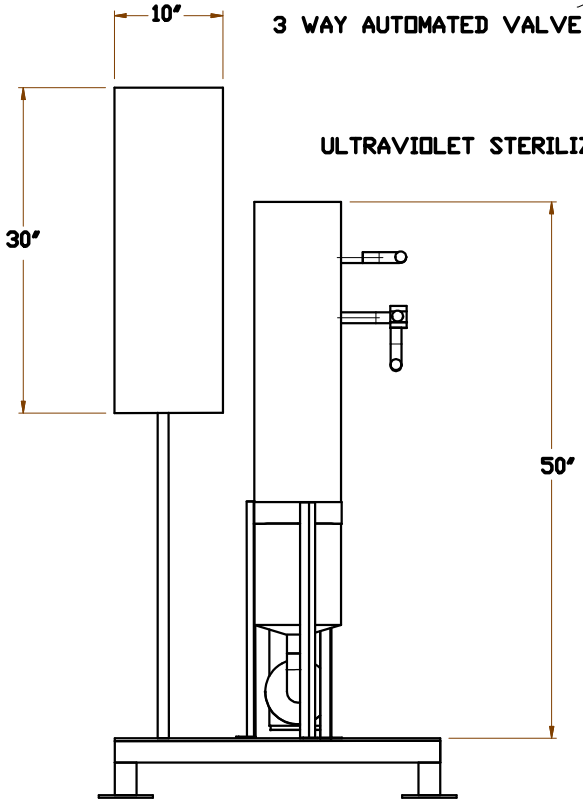

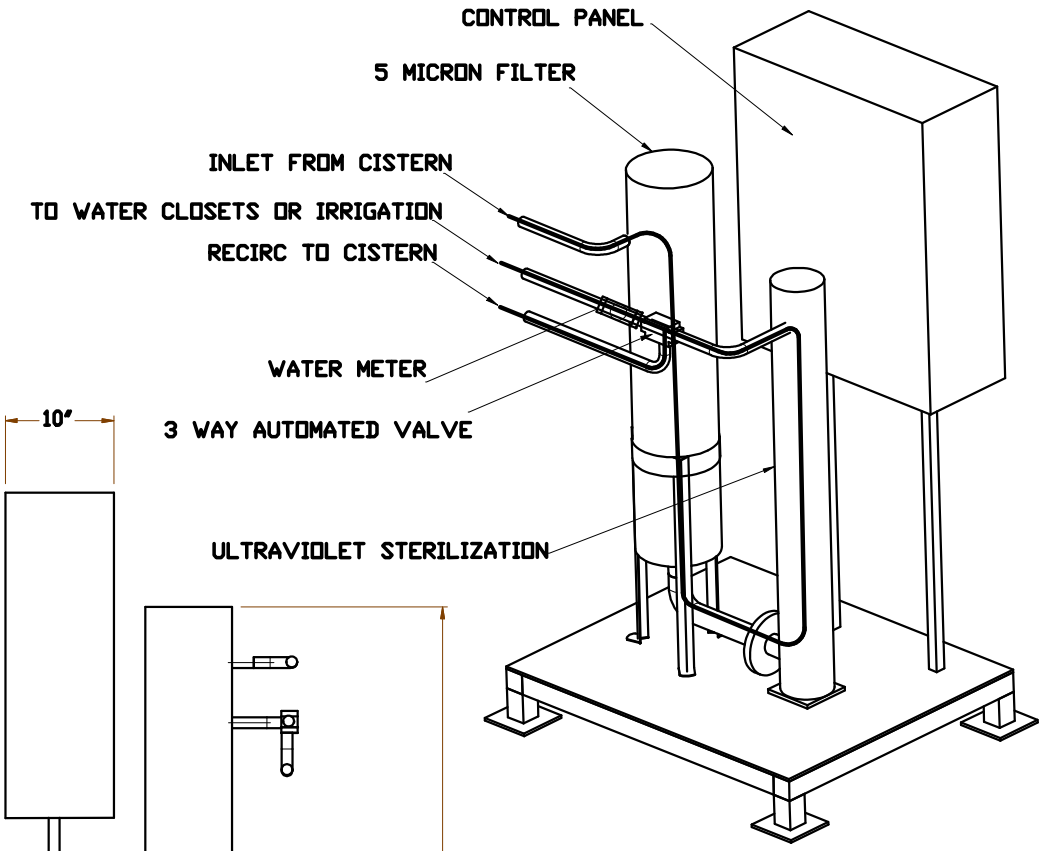

AQUANOMIX

AQUANOMIX
DAVIDSON NC

THE INFORMATION CONTAINED HEREIN IS CONFIDENTIAL AND PROPRIETARY TO AQUANOMIX LLC, AND SHALL NOT BE COPIED, REPRODUCED, DISCLOSED, PUBLISHED, OR USED FOR ANY PURPOSE WITHOUT THE EXPRESS WRITTEN PERMISSION OFAQUANOMIX

MATERIAL APPROVAL XXX	DATE 03/27/10	UNLESS OTHERWISE NOTED, DIMENSIONS AND TOLERANCES ARE DEFINED ACCORDING TO ASME STANDARD Y14.5M-1994, WITH EXCEPTIONS PER DTMA 09ENG-W1037.
DRAWN BY D. KRAYDICH	DATE 03/27/10	
CHECKED BY W. SHIRLEY	DATE 03/27/10	
RESPONSIBLE ENGINEER W. SHIRLEY	DATE 03/27/10	THIRD ANGLE PROJECTION
APPROVED BY R. O'DONNELL	DATE 03/27/10	UNITS OF MEASURE IN.

DESCRIPTION: AX-TI

ITEM/DRAWING NUMBER	REV LETTER	SHEET NUMBER
001	A	1 OF 1